REVISION RECORD				
SYM	DESCRIPTION	BY	DATE	APPD

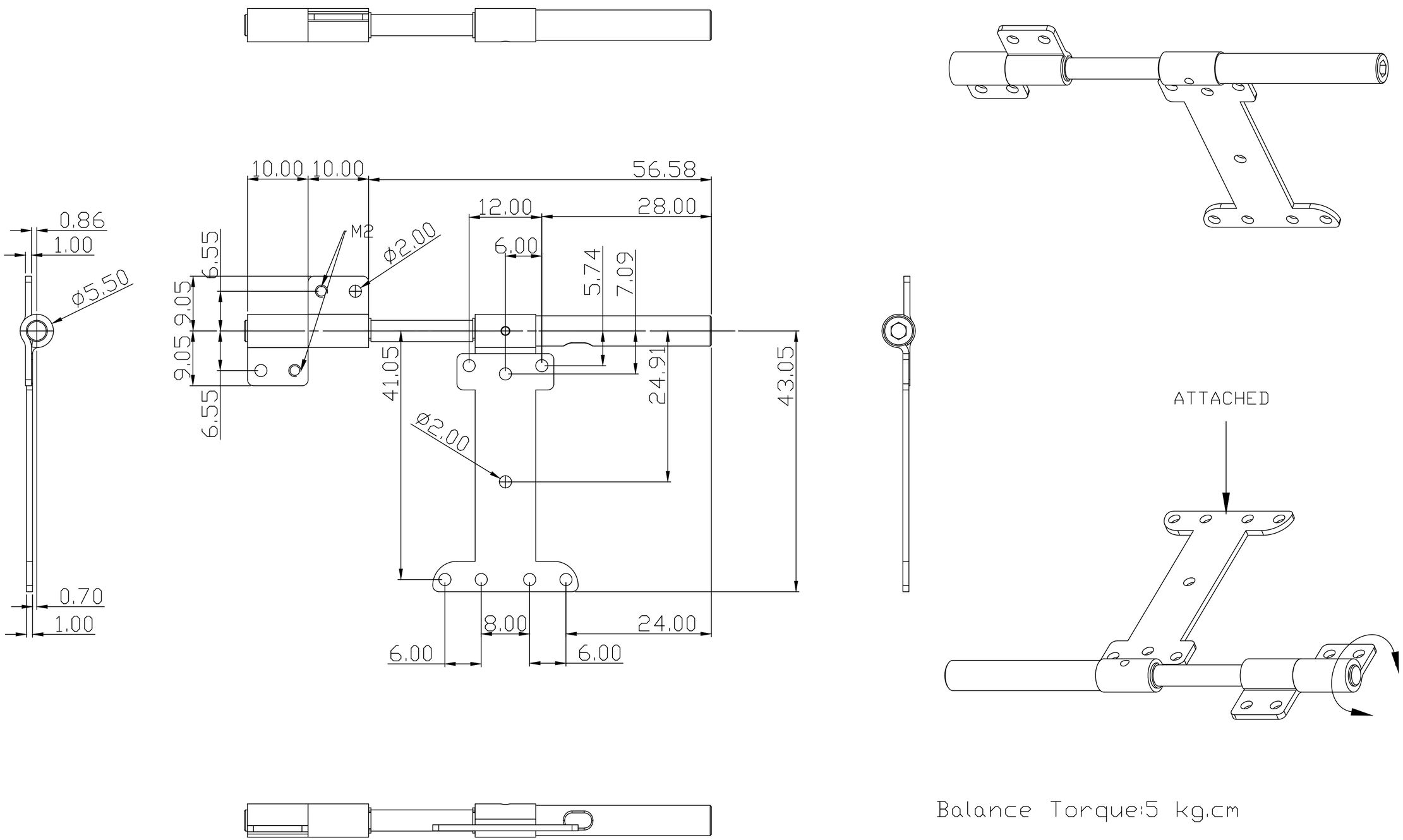

Balance Torque:5 kg.cm

TOLERANCES		ENGLISH / METRIC	Shinelot Enterprise	
ENGLISH	METRIC			
.XX ○.015 in .XXX ○.005 in .XXXX ○.0002 in	.X ○.3 mm .XX ○.13 mm .XXX ○.05 mm	DRAWN BY	DATE	MATERIAL
ANGLES ○.5° SURFACE 63		CHECKED BY	DATE	TITLE V-001-HNG
				SIZE C / REV 0.0
				SCALE 2:1 / SHEET 1 OF 1