REVISION RECORD				
SYM	DESCRIPTION	BY	DATE	APPD

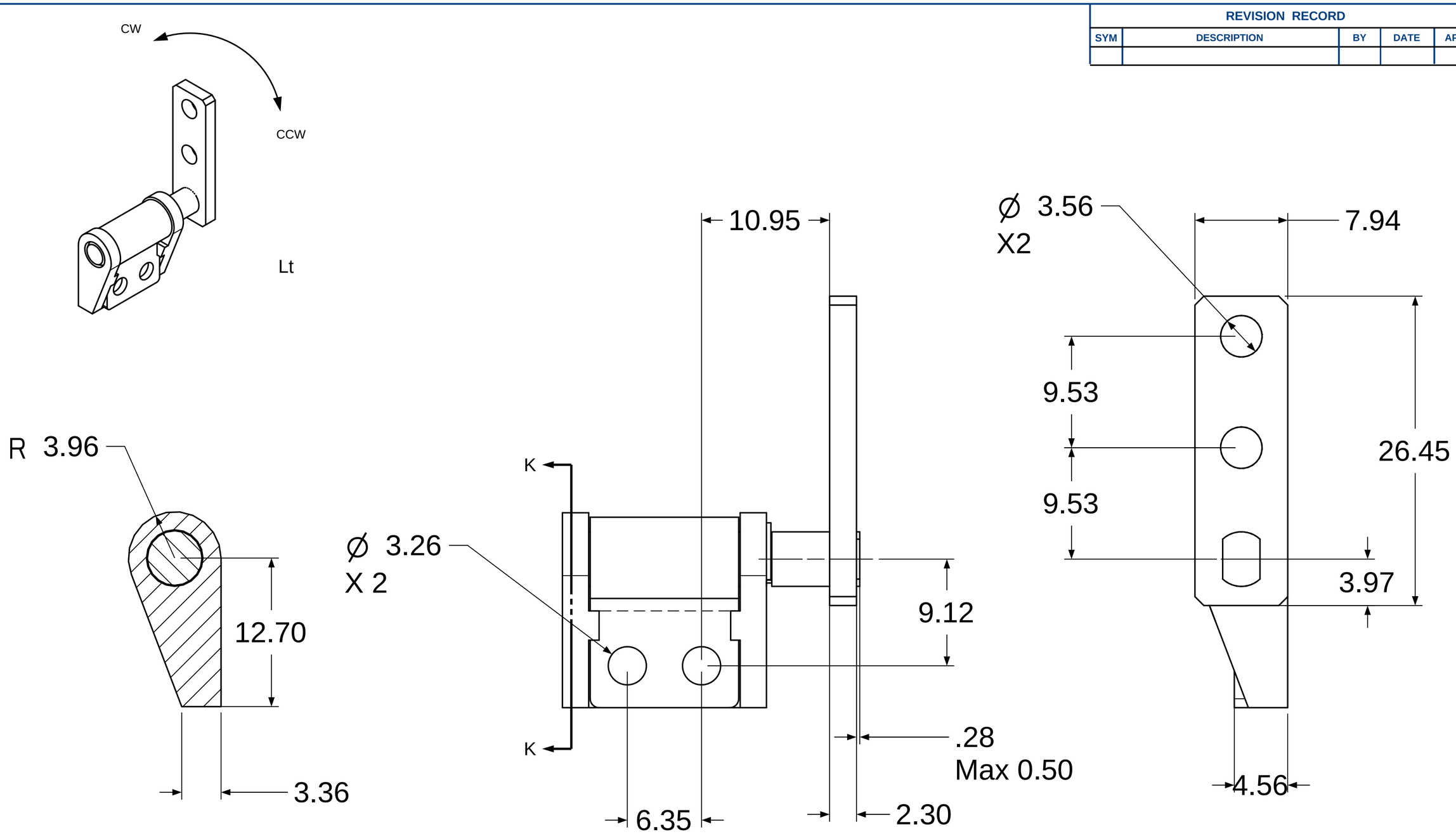

NOTES:

Rt CCW TORQUE = 10kgf-cm +/- 15%
Rt CW TORQUE = Less than ccw
Lt CW TORQUE = 10kgf-cm +/- 15%
Lt CCW TORQUE = Less than cw

USED ON	SOLID	REV	TOLERANCES		ENGLISH / METRIC	Shinelot Enterprise
			ENGLISH	METRIC		
NEXT ASSY			.XX ±015 in .XXX ±005 in .XXXX ±0002 in	.X ±.3 mm .XX ±.13 mm .XXX ±.05 mm	DRAWN BY Ray	DATE 11/04/20
QUANTITY						
PER ASSY, PCS		1	ANGLES±.5° SURFACE 63		CHECKED BY	DATE
TOTAL, PCS		1				

MATERIAL

TITLE 1000-0401-HNG MOD L BENT(10kgf-cm)

SIZE C | REV 0.0

SCALE 1:1 | SHEET 1 OF 1